2. Front Exhaust Pipe

A: REMOVAL

CAUTION:
Be careful not to burn yourself, because the exhaust pipe becomes extremely hot after running.

1) Set the vehicle on a lift.
2) Disconnect the ground cable from the battery.

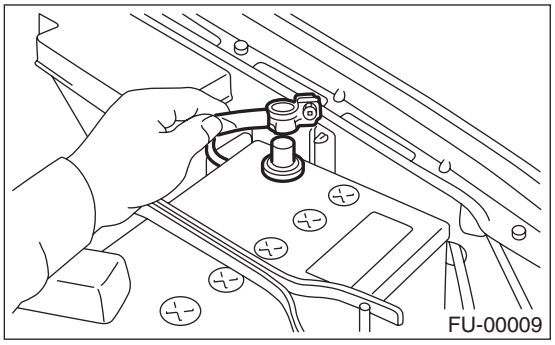

3) Unclip the clip fastening the harness and disconnect the following connectors.
   (1) Front oxygen (A/F) sensor connector
   (2) Rear oxygen sensor connector

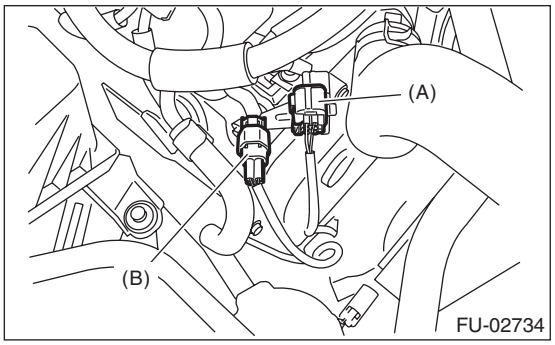

(A) Front oxygen (A/F) sensor connector
(B) Rear oxygen sensor connector

4) Lift up the vehicle.
5) Separate the center exhaust pipe from rear exhaust pipe.

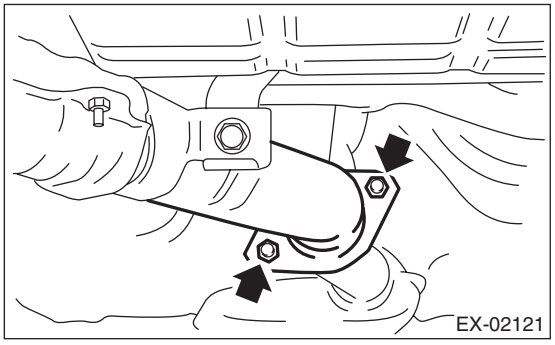

6) Remove the under cover.
7) Remove the nuts which hold front exhaust pipe onto cylinder heads.

CAUTION:
Be careful not to pull down the front and center exhaust pipe assembly.

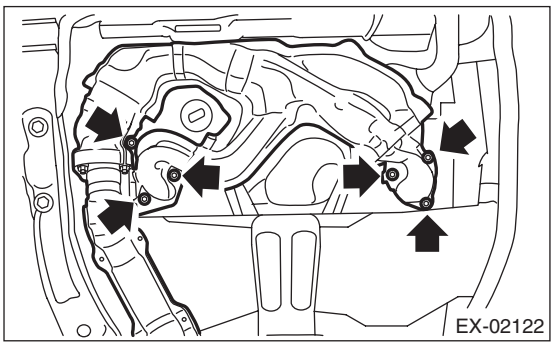

8) Remove the bolts which hold the front and center exhaust pipe assemblies to the hanger bracket.

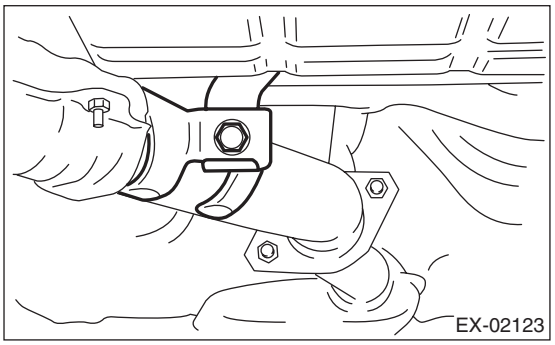

9) Remove the front and center exhaust pipe assembly from the vehicle.

CAUTION:
- **The front and center exhaust pipe assemblies are very heavy. Be careful not to drop the exhaust pipes when removing.**
- **After removing the front and center exhaust pipe assemblies, do not pull on the rear exhaust pipe with excessive force.**

10) Separate the front exhaust pipe from center exhaust pipe.

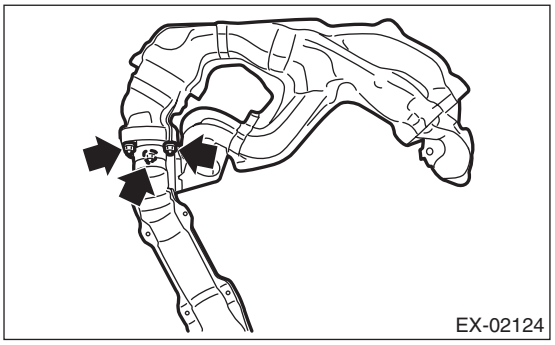

11) Remove the front oxygen (A/F) sensor and rear oxygen sensor. <Ref. to FU(H4SO)-36, REMOVAL, Front Oxygen (A/F) Sensor.><Ref. to FU(H4SO)-37, REMOVAL, Rear Oxygen Sensor.>

B: INSTALLATION

1) Install the front oxygen (A/F) sensor and rear oxygen sensor. <Ref. to FU(H4SO)-36, INSTALLATION, Front Oxygen (A/F) Sensor.> <Ref. to FU(H4SO)-37, INSTALLATION, Rear Oxygen Sensor.>
2) Install the front exhaust pipe to center exhaust pipe.

NOTE:
Use a new gasket.

Tightening torque:
40 N·m (4.1 kgf-m, 29.5 ft-lb)

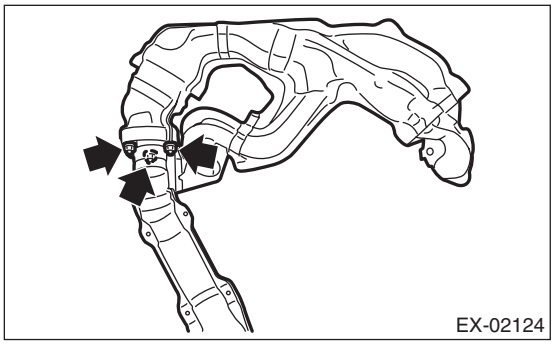

3) Install the front and center exhaust pipe assembly to the vehicle.

NOTE:
Use a new gasket.
4) Temporarily tighten the nuts which hold front exhaust pipe to cylinder heads.

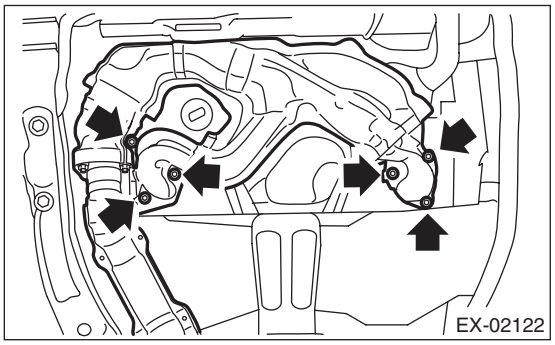

5) Tighten the bolt which holds the center exhaust pipe to exhaust pipe.

Tightening torque:
18 N·m (1.8 kgf-m, 13.0 ft-lb)

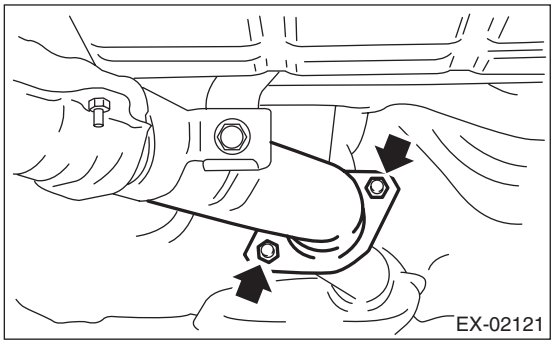

6) Tighten the bolts which affix the front and center exhaust pipe assemblies to the hanger bracket.

Tightening torque:
35 N·m (3.6 kgf-m, 26.0 ft-lb)

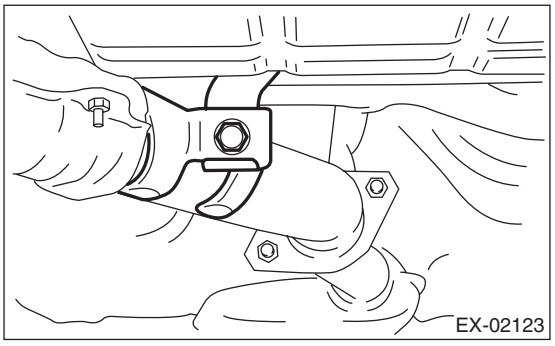

7) Tighten the nuts which hold front exhaust pipe to cylinder heads.

Tightening torque:
30 N·m (3.1 kgf-m, 22.4 ft-lb)

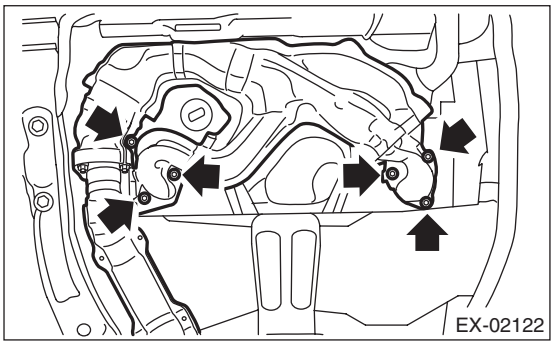

8) Install the under cover.
9) Lower the vehicle.
10) Connect the following connectors.
(1) Front oxygen (A/F) sensor connector
(2) Rear oxygen sensor connector

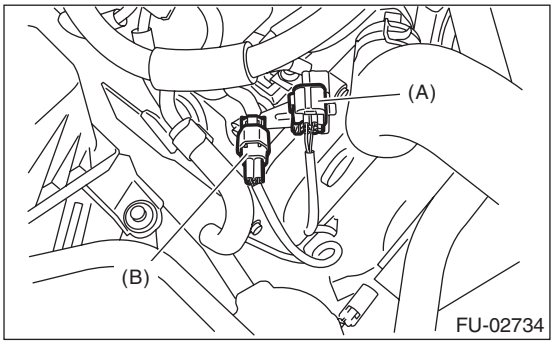

(A) Front oxygen (A/F) sensor connector
(B) Rear oxygen sensor connector

11) Connect the battery ground cable to battery.

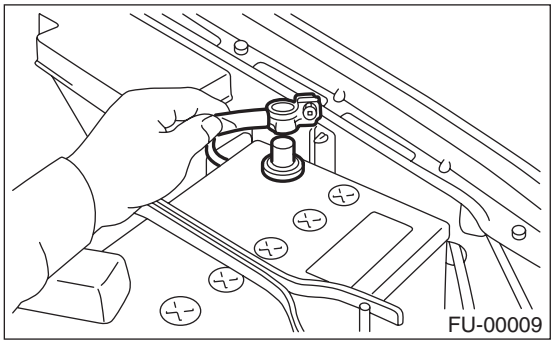

C: INSPECTION

1) Check the connections and welds for exhaust leaks.
2) Make sure there are no holes or rusting.